REV.	ECN NO.	MODIFY MATTER	DATE	APPROVED
A		RELEASE TO PRODUCTION		

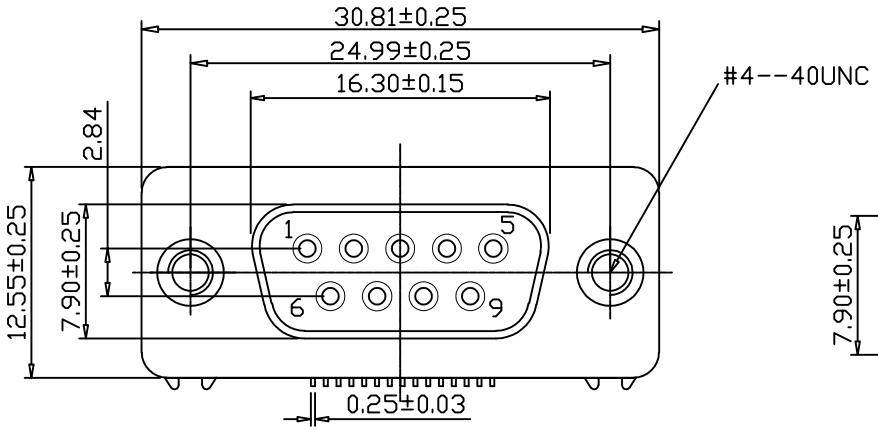

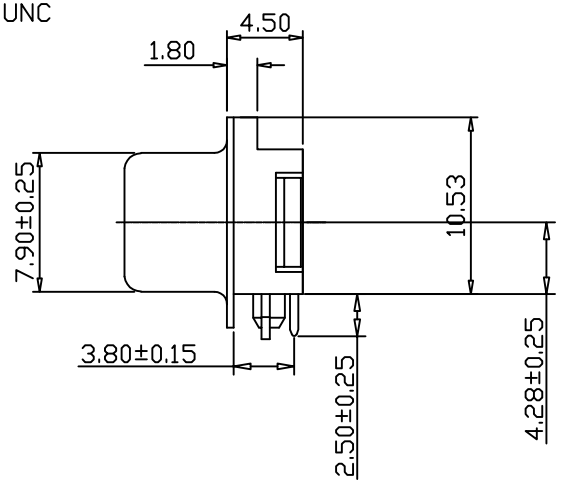

RoHS Compliant

SPECIFICATIONS

ELECTRICAL CHARACERISTICS:

Contact Current Rating:3 Amperes.
Dielectric Withstanding Voltage:
AC 1000/60sec.r.m.s.
Insulation Resistance:5000 Medohms
Minimum.at DC 500V.
Contact Resistaance:25 Milliohms Maximum.
Operating Temperature:-55°C to+105°C.

MECHANICAL CHARACTERISTICS:

Contact Insertion Force:341 g.Maximum.
Contact Separation Force:21 g.Minimum.

MATERIALS:

Contacts:Brass.
Insulator: PBT UL 94V-0 Rated.
Shell:Cold Roller Steel.

FINISHES:

Contact:Gold Flash.
Shell:Nickel Plated.

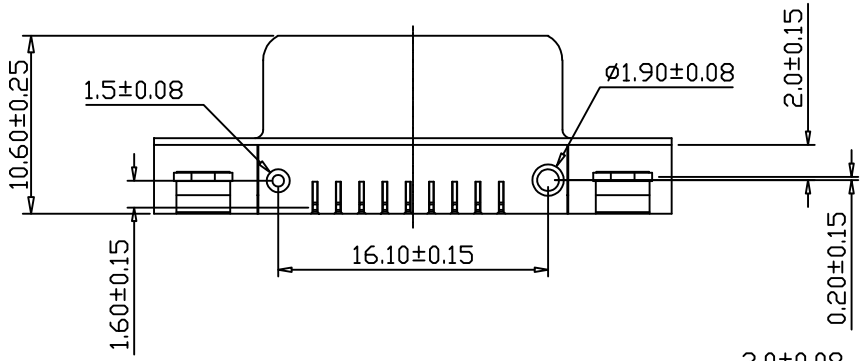

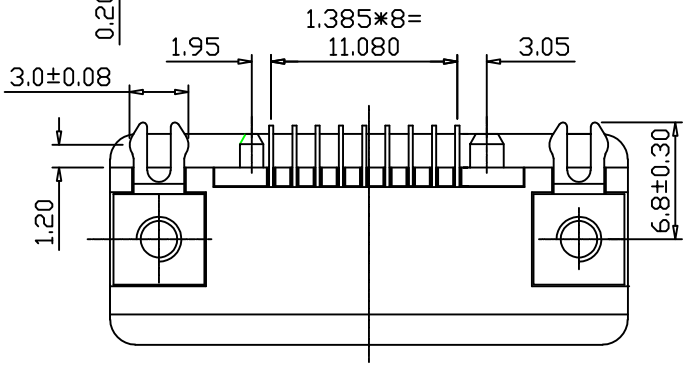

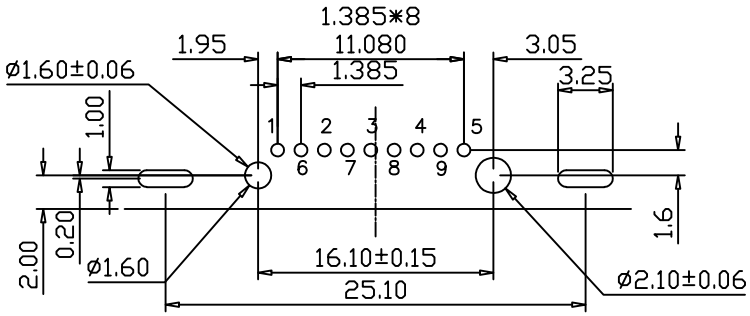

EAST-SLIM09X040-XXX

螺丝：
0：锁螺丝
1：无螺丝
2：附螺丝

颜色：
001 绿色
003 蓝色
005: 黑色

TOLERANCES UNLESS OTHERWISE SPECIFIED: X. --- X.X ± 0.38 X.XX ± 0.25 X.XXX ± 0.20 Angle ±3°	COSTOMER COPY	深圳市东方御业科技有限公司 WWW.DFYYCONN.COM TEL:0755-27155560	
	DRAWN: Qinkx	2017/09/10	TITAL: SLIM9母半金铆合12.5 (RoHS)
	CHECKED: Chenl	2017/09/10	PART NO: EAST-SLIM09X040-XXX / DRAWING NO:
THESE DRAWING AND SPCIFICATION ARE THE PROPERTY OF Shenzhen Dongfangyuye ELECTRONIC CO., LTD.. SHALL NOT BE REPRODUCED.	APPROVED: Chenl	2017/09/10	UNIT: mm / SCALE: N/A / SHEEL: / REV.

DO NOT SCALE PRINT