REV.	ECN NO.	MODIFY MATTER	DATE	APPROVED
A		RELEASE TO PRODUCTION		

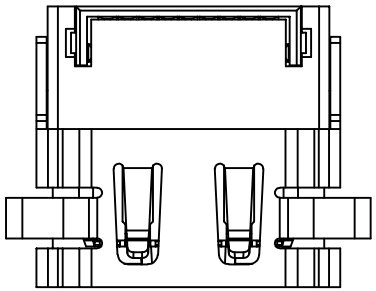

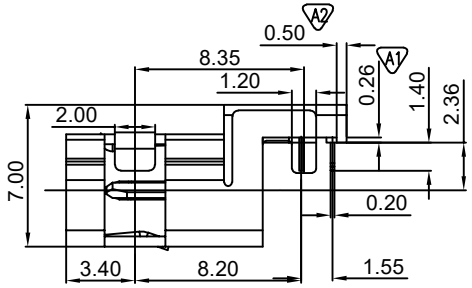

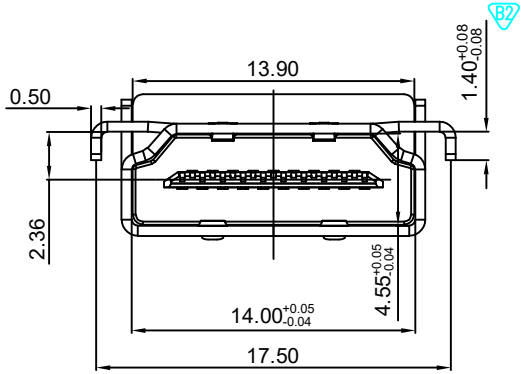

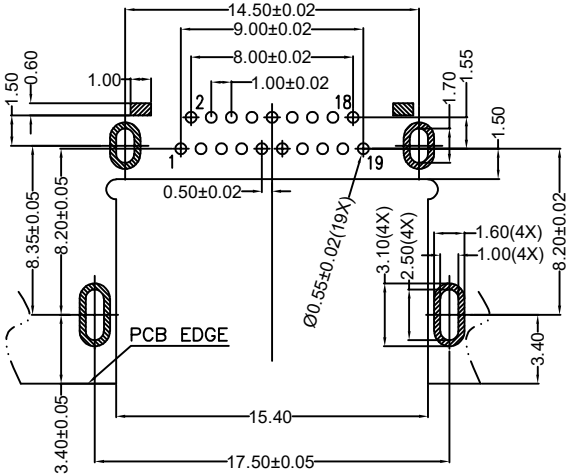

P.C.B LAYOUT(T=1.20mm)
COMPONENT SIDE

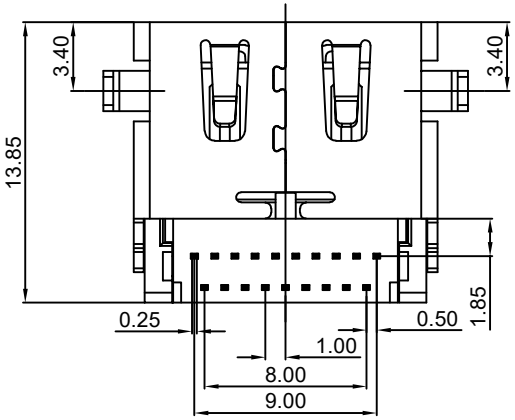

NOTES:

*Material

SHELL: SPCC T=0.5MM.
Housing&Spacer:LCP, UL 94V-0 Rated;Color: Black.
Shield: Brass.
Plating: Nickle(40~80u") Plating .
Contact: Brass.
Plating: Gold Plating Over Nickel(40~80u") on Contact Area; Tin(100~250u") Plating On Solder Tail.

*Electrical Specification

Operation Voltage: 40 VAC max.
Current Rating: 0.5 Ampere per contact
Contact Resistance: 10 mΩ max.
Insulation Resistance: 100 MΩ min.
Dielectric Withstanding Voltage: 500 VAC

*Environmental

Operating Temperature: -25°C to +85°C

PIN	SIGNAL ASSIGNMENT	PIN	SIGNAL ASSIGNMENT
1	TMDS Data2+	11	TMDS Clock Shield
2	TMDS Data2 Shield	12	TMDS Clock-
3	TMDS Data2-	13	CEC
4	TMDS Data+	14	Reserved (N.C. on device)
5	TMDS Data1 Shield	15	SCL
6	TMDS Data1-	16	SDA
7	TMDS Data0+	17	DDC/CEC Ground
8	TMDS Data0 Shield	18	+5V Power
9	TMDS Data0-	19	Hot Plug Detect
10	TMDS Clock+		

TOLERANCES UNLESS OTHERWISE SPECIFIED:

X.	---
X.X	± 0.38
X.XX	± 0.25
X.XXX	± 0.10
Angle	±1°

THESE DRAWING AND SPCIFICATION ARE THE PROPERTY OF Shenzhen Dongfangyuye ELECTRONIC CO., LTD.. SHALL NOT BE REPRODUCED.

COSTOMER COPY

深圳市东方御业科技有限公司
WWW.DFYYCONN.COM TEL:0755-27155560

DRAWN: CHENLEI	2017/09/10	TITAL: HDMI Receptacle Reverse CL=-5.14 Dip (RoHS)
CHECKED: CHENLEI	2017/09/10	PART NO: EAST-HD19BE5H3S02
APPROVED: QINKAIXING	2017/09/10	UNIT: mm / SCALE: N/A / SHEEL: 1:1 / REV.